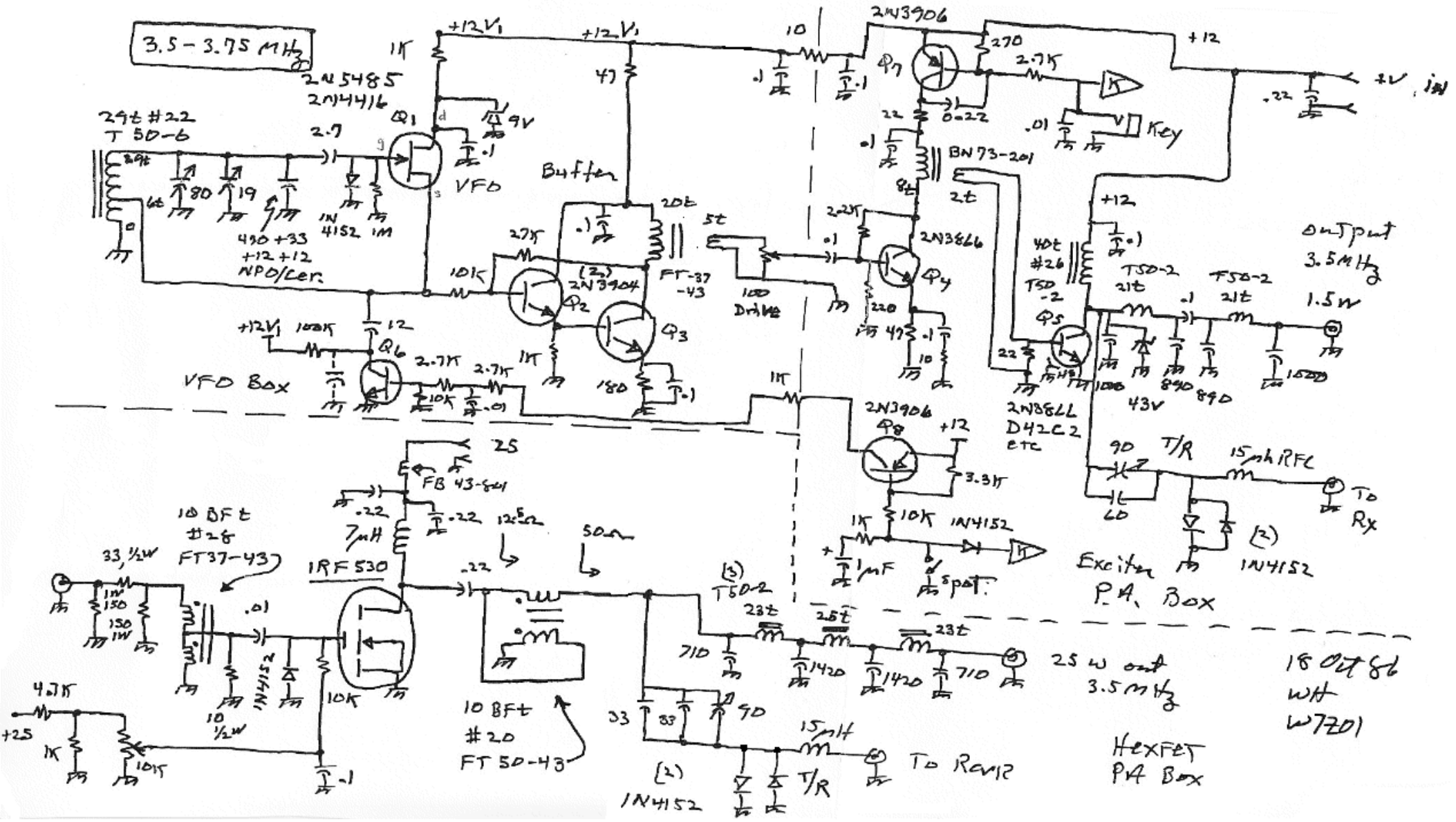
3.5 - 3.75 MHz
2N5485
2N4416
Q1
VFO
Buffer
2N3904
Q2
Q3
FT-37 -43
Drive
2N3906
Q7
Key
BN73-201
2N3866
Q4
Q5
2N3866
D42C2
etc
Output
3.5 MHz
1.5 W
VFO Box
Q6
Q8
T/R
To Rx
Exciter
P.A. Box
IRF530
FB 43-641
10 BFt
#26
FT37-43
10 BFt
#20
FT 50-43
To Rcvr
HexFET
PA Box
18 Oct 86
WH
W7ZOI